3 rooms in Musicians Quarter

€380,000

Musicians Quarter · 3 rooms · 76 m² in size



Key details

Surface area	**76 m²**
Rooms	**3**

DPE (Energy) **E**

Lowest: A
Highest: G

A
B
C
D
E ✓
F
G

GES (Emissions) **E**

Lowest: A
Highest: G

A
B
C
D
E ✓
F
G

Description

In the heart of Nice's vibrant Musiciens district, this property offers a unique opportunity in a well-maintained early 20th-century building. Situated on an elevated ground floor, the space spans 76 square meters and is currently configured as office/medical practice space, originally a three-room apartment. It features an entrance, five distinct rooms, a kitchenette with a water point and shower, and a separate WC with a washbasin. The property boasts beautiful high ceilings and solid wood flooring. Additionally, a large cellar is included. The layout is east/west facing, providing ample natural light throughout the day. The location is convenient, with easy access to amenities, shops, and the tramway.

Monthly management cost is 200€ including collective heating and cold water. The energy efficiency rating is E. There are 10 lots in the co-ownership.

3 rooms in Musicians Quarter

€380,000

Musicians Quarter · 3 rooms · 76 m² in size





3 rooms in Musicians Quarter

€380,000

Musicians Quarter · 3 rooms · 76 m² in size









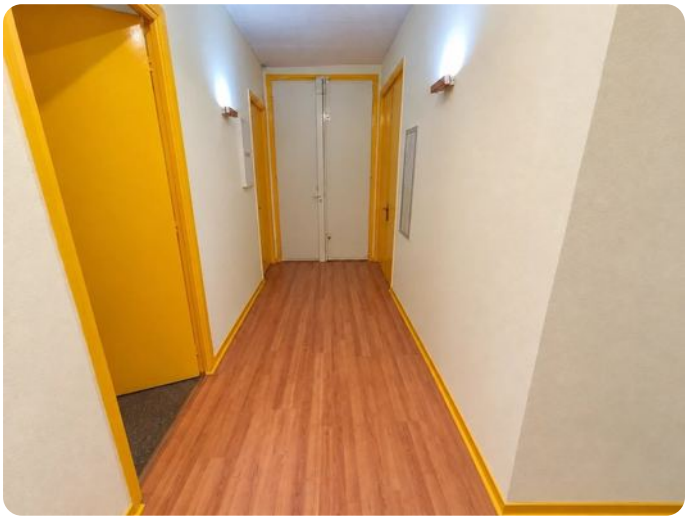



3 rooms in Musicians Quarter

€380,000

Musicians Quarter · 3 rooms · 76 m² in size

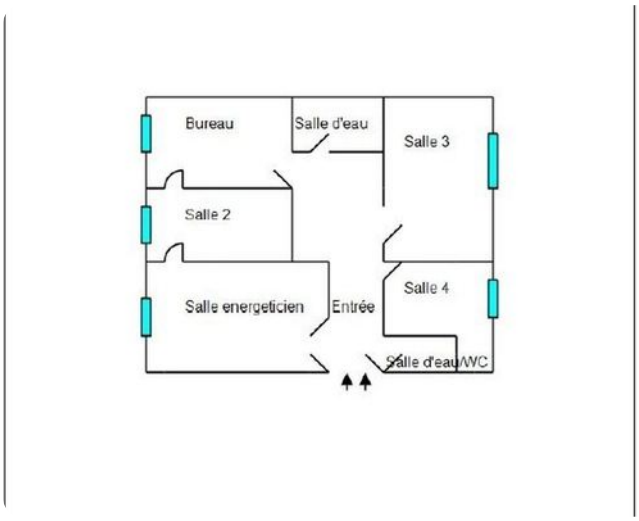

Total : 76,13 m²

(Soixante-seize mètres carrés treize)

RFACES PAR LOCAL

al	Etage	Surface Loi Carrez	Surface Ho
	RDC	10,520 m²	0,000
ien	RDC	12,000 m²	0,000
	RDC	10,100 m²	0,000
	RDC	12,910 m²	0,000
	RDC	3,150 m²	0,000
	RDC	13,670 m²	0,000
	RDC	10,650 m²	0,000
C	RDC	3,130 m²	0,000
		76,130 m²	0,000

Dépendances	Etage	Surface Hors Carre
we n°1	1er SS	7,100 m²
Total		7,100 m²

