3 rooms in Musicians Quarter

€399,000

Musicians Quarter · 3 rooms · 76 m² in size



Key details

Surface area	**76 m²**
Rooms	**3**

DPE (Energy) **E**

Lowest: A
Highest: G

A
B
C
D
E ✓
F
G

GES (Emissions) **E**

Lowest: A
Highest: G

A
B
C
D
E ✓
F
G

Description

In the heart of Nice's city center, within the Musiciens district, lies a well-maintained early 20th-century building. This elevated ground floor property spans 76 square meters and is currently configured as office space or a medical practice, originally a three-room apartment. The layout includes an entryway, five distinct rooms, a kitchenette with a water point and a shower, and a separate WC with a hand basin. The property features high ceilings and solid wood flooring. A large cellar is also included, and the property benefits from an east-west orientation. It is conveniently located near amenities, shops, and the tramway.

Monthly management costs are 200€, which cover collective heating and cold water. The energy efficiency rating is E. There are 10 lots in the co-ownership.

3 rooms in Musicians Quarter

€399,000

Musicians Quarter · 3 rooms · 76 m² in size





3 rooms in Musicians Quarter

€399,000

Musicians Quarter · 3 rooms · 76 m² in size









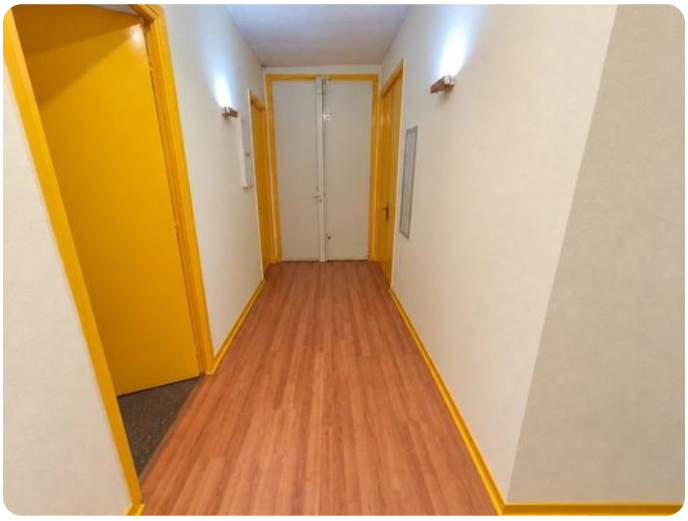



3 rooms in Musicians Quarter

€399,000

Musicians Quarter · 3 rooms · 76 m² in size

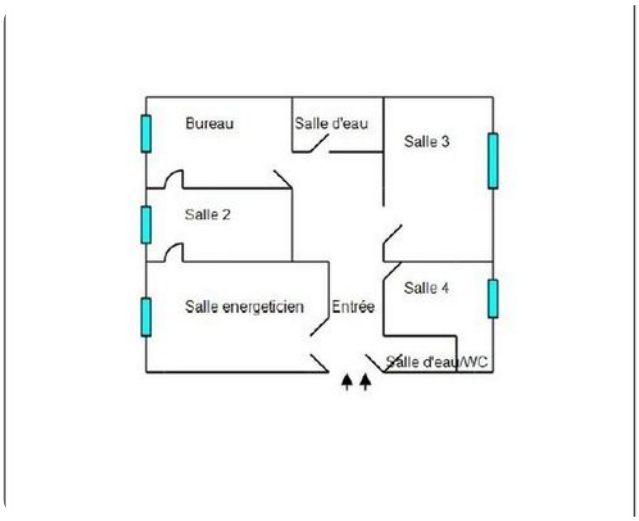

Total : 76,13 m²

(Soixante-seize mètres carrés treize)

RFACES PAR LOCAL

al	Etage	Surface Loi Carrez	Surface Ho
	RDC	10,520 m²	0,000
ien	RDC	12,000 m²	0,000
	RDC	10,100 m²	0,000
	RDC	12,910 m²	0,000
	RDC	3,150 m²	0,000
	RDC	13,670 m²	0,000
	RDC	10,650 m²	0,000
C	RDC	3,130 m²	0,000
		76,130 m²	0,000

Dépendances	Etage	Surface Hors Carre
we n°1	1er SS	7,100 m²
Total		7,100 m²

